MEGNA POOLS
Megna Plastic Packaging Corp.
821 BROCK RD. UNIT 1
PICKERING, ONT
L1W 3L6
TEL:(905)837-1115
FAX:(905)837-7588

SOLD TO:

WALL PATTERN: _____
FLOOR PATTERN: _____
MIL: _____

TAG NAME: _____
DATE: _____
P.O: _____

MUST PROVIDE PERIMETER TOTAL: _____

SAFTEY LEDGE
IF LEDGE VARIES PLEASE INDICATE
[ ] NO [ ] YES
RIGHT LEDGE ____ IN. LEFT LEDGE ____ IN.
END LEDGE ____ IN.

CHECK OFF BEAD TYPE
[ ] STANDARD
[ ] OTHER _____
[ ] NO BEAD _____ IN. OVERLAP

SLOPES
[ ] STANDARD
[ ] OTHER
[ ] NO BEAD

RECTANGLE(RADIUS)

MUST PROVIDE DIANGONALS IF POOL IS OUT OF SQUARE

END VIEW

STANDING FROM DEEP END

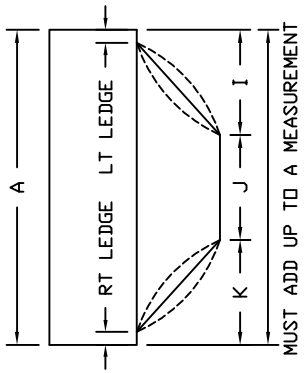

TOP VIEW

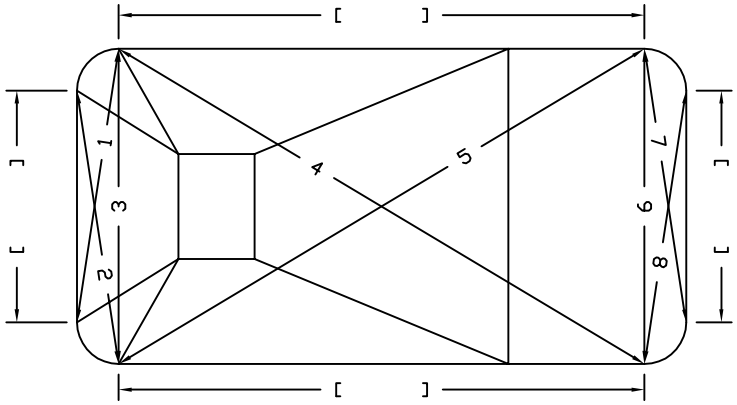

JUST AN EXAMPLE:
IF STEP IS RADIUS
PLEASE INDICATE

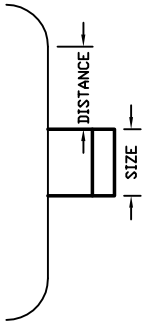

ATTENTION

INIDICATE WHERE THE STEP IS LOCATED. PROVIDE THE SIZE OF STEP AND A MEASUREMENT FROM THE CLOSEST PANEL JOINT, AS SHOWN IN THE EXAMPLE.

SIZE OF STEP

DISTANCE

INDICATE CORNER TYPE

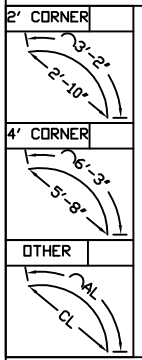

AL: _____
CL: _____

SIDE VIEW

IF DEEP END WALL IS DIFFERENT THEN SHALLOW END WALL

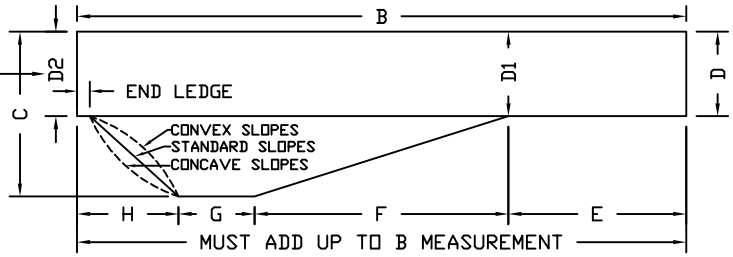

MEASUREMENTS	
A	
B	
C	
D	
D2	
E	
F	
G	
H	
I	
J	
K	
1	
2	
3	
4	
5	
6	
7	
8	

COVE PROFILE

D1= ____
S1= ____
S2= ____
S3= ____

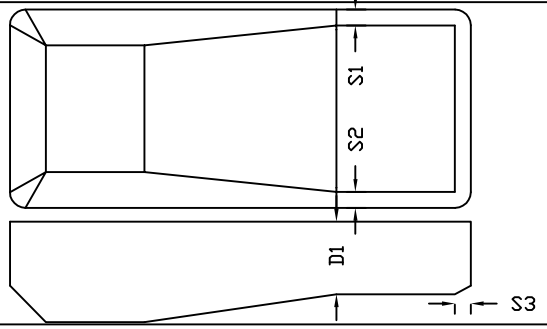

DEEPER BREAK PROFILE

D1= ____
S1= ____
S2= ____

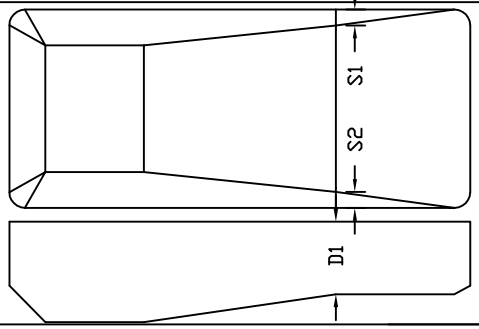

DESIGNER: NOEL MANLAPAZ